SNP THE SPRAY NOZZLE PEOPLE

FF

Flat Fan
Extra Wide

BETE PERFORMANCE SPRAY ENGINEERING

FLAT FAN

DESIGN FEATURES

- One-piece construction
- Clog resistant
- Durable
- All 3/8" FFs in Brass are available with UL approval
- Male connection



SPRAY CHARACTERISTICS

- Extra-wide 145° spray angle
- Medium-impact spray
- Spray discharge deflected 75° from inlet axis
- Coarse atomisation
- Spray pattern: Flat Fan
- Spray angle: 105° and 145°
- Flow rates: 0.510 to 757 l/min

The FF is a deflector style flat fan spray nozzle with an extra wide angle pattern. It produces a relatively coarse spray with a medium impact. The spray is deflected by 75° from the original direction of the fluid. FF nozzle are used in a variety of applications including:

Dust Control
Wetting
Parts Washing
Conveyor Cleaning
And more.

CALL NOW : +44 (0) 1273 400092

www.spray-nozzle.co.uk

FF

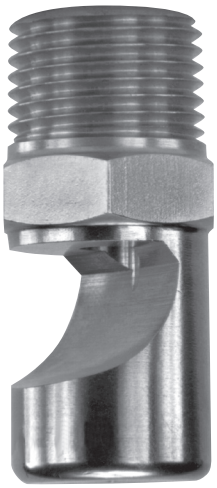

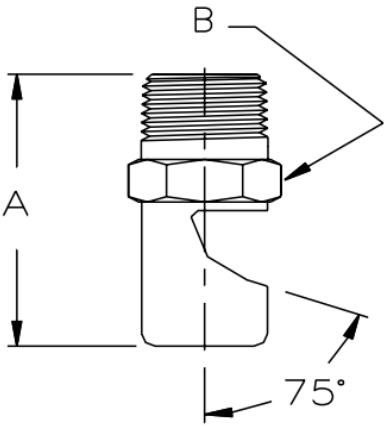

Metal

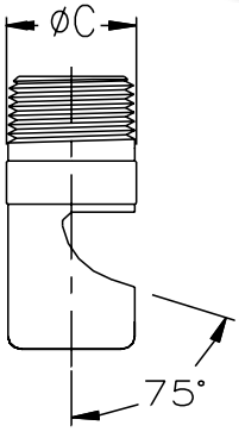

Plastic

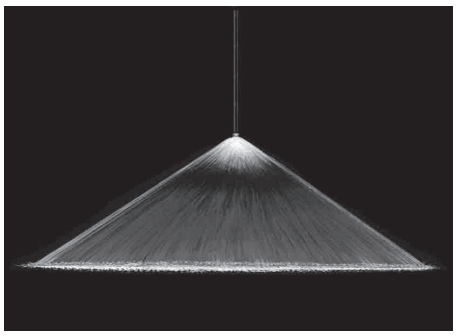

FF Flow Rates

Fan, 105° and 145° Spray angle, 1/8" to 1" Pipe Sizes, BSP or NPT
Standard Materials: Brass, 303 and 316 Stainless Steel, PVC and PTFE

Male Pipe Size	Nozzle Number	Spray Angle	K	Litres per minute @ BAR 0.2 bar	0.5 bar	0.7 bar	1 bar	2 bar	3 bar	5 bar	10 bar	Approx Orifice Dia (mm)	Pipe Size	Dim (mm) A	B	C	Weight (g) M	P
	FF016	105°	0.114	0.051	0.081	0.095	0.114	0.161	0.197	0.255	0.36	0.406						
	FF024	105°	0.228	0.102	0.161	0.191	0.228	0.322	0.395	0.51	0.721	0.61						
	FF028	105°	0.342	0.153	0.242	0.286	0.342	0.483	0.592	0.764	1.08	0.711						
	FF033	105°	0.456	0.204	0.322	0.381	0.456	0.645	0.789	1.02	1.44	0.838						
1/8"	**FF041**	145°	0.684	0.306	0.483	0.572	0.684	0.967	1.18	1.53	2.16	1.04						
	FF046	145°	0.912	0.408	0.645	0.763	0.912	1.29	1.58	2.04	2.88	1.17						
	FF052	145°	1.14	0.51	0.806	0.953	1.14	1.61	1.97	2.55	3.6	1.32	1/8"	25.4	11.2	12.7	14	3
	FF057	145°	1.37	0.611	0.967	1.14	1.37	1.93	2.37	3.06	4.32	1.45						
	FF065	145°	1.82	0.815	1.29	1.53	1.82	2.58	3.16	4.08	5.77	1.65						
	FF073	145°	2.28	1.02	1.61	1.91	2.28	3.22	3.95	5.1	7.21	1.85						
	FF093	145°	3.42	1.53	2.42	2.86	3.42	4.83	5.92	7.64	10.8	2.36						
	FF104	145°	4.56	2.04	3.22	3.81	4.56	6.45	7.89	10.2	14.4	2.64						
1/8" or 1/4"	**FF116**	145°	5.47	2.45	3.87	4.58	5.47	7.73	9.47	12.2	17.3	2.95						
	FF125	145°	5.7	2.55	4.03	4.77	5.7	8.06	9.87	12.7	18	3.18						
	FF129	145°	6.84	3.06	4.83	5.72	6.84	9.67	11.8	15.3	21.6	3.28						
	FF141	145°	8.2	3.67	5.8	6.86	8.2	11.6	14.2	18.3	25.9	3.58						
	FF148	145°	9.12	4.08	6.45	7.63	9.12	12.9	15.8	20.4	28.8	3.76	1/4"	35.1	14.2	16.0	35	7.5
	FF156	145°	10	4.48	7.09	8.39	10	14.2	17.4	22.4	31.7	3.96						
1/4"	**FF161**	145°	10.9	4.89	7.73	9.15	10.9	15.5	18.9	24.5	34.6	4.09						
	FF173	145°	12.3	5.5	8.7	10.3	12.3	17.4	21.3	27.5	38.9	4.39						

Flow Rate (l/min) = $K\sqrt{bar}$

FF Flow Rates

Fan, 105° and 145° Spray angle, 1/8" to 1" Pipe Sizes, BSP or NPT
Standard Materials: Brass, 303 and 316 Stainless Steel, PVC and PTFE

Male Pipe Size	Nozzle Number	Spray Angle	K	Litres per minute @ BAR								Approx Orifice Dia (mm)	Pipe Size	Dim (mm)			Weight (g)	
				0.2 bar	0.5 bar	0.7 bar	1 bar	2 bar	3 bar	5 bar	10 bar			A	B	C	M	P
3/8"	FF187	145°	13.7	6.11	9.67	11.4	13.7	19.3	23.7	30.6	43.2	4.75	3/8"	44.5	17.5	19.1	72	15
	FF196	145°	16	7.1	11.3	13.3	16	22.6	27.6	35.7	50.4	4.98						
	FF209	145°	17	7.6	12	14.2	17	24	29.4	38	53.8	5.31						
	FF218	145°	18.2	8.2	12.9	15.3	18.2	25.8	31.6	40.8	57.7	5.54						
	FF221	145°	20.5	9.2	14.5	17.2	20.5	29	35.5	45.9	64.9	5.61						
1/2"	FF209	145°	17	7.6	12	14.2	17	24	29.4	38	53.8	5.31	1/2"	50.8	22.4	22.4	117	25
	FF218	145°	18.2	8.2	12.9	15.3	18.2	25.8	31.6	40.8	57.7	5.54						
	FF250	145°	23.9	10.7	16.9	20	23.9	33.8	41.4	53.5	75.7	6.35						
	FF256	145°	27.3	12.2	19.3	22.9	27.3	38.7	47.4	61.1	86.5	6.55						
	FF281	145°	31.9	14.3	22.6	26.7	31.9	45.1	55.3	71.3	101	7.14						
	FF312	145°	36.5	16.3	25.8	30.5	36.5	51.6	63.2	81.5	115	7.92						
	FF375	145°	54.7	24.5	38.7	45.8	54.7	77.3	94.7	122	173	9.53						
3/4"	FF316	145°	41	18.3	29	34.3	41	58	71	92	130	8.03	3/4"	66.8	38.1	38.1	345	73
	FF332	145°	45.6	20.4	32.2	38.1	45.6	64.5	78.9	102	144	8.43						
	FF348	145°	50.1	22.4	35.5	41.9	50.1	70.9	86.8	112	159	8.84						
	FF368	145°	54.7	24.5	38.7	45.8	54.7	77.3	94.7	122	173	9.35						
	FF406	145°	63.8	28.5	45.1	53.4	63.8	90.2	111	143	202	10.3						
	FF437	145°	72.9	32.6	51.6	61	72.9	103	126	163	231	11.1						
	FF453	145°	82	36.7	58	68.6	82	116	142	183	259	11.5						
	FF484	145°	95.7	42.8	67.7	80.1	95.7	135	166	214	303	12.3						
	FF500	145°	109	48.9	77.3	91.5	109	155	189	245	346	12.7						
1"	FF578	145°	137	61.1	96.7	114	137	193	237	306	432	14.7	1"	85.9	50.8	50.8	908	192
	FF625	145°	166	74.4	118	139	166	235	288	372	526	15.9						
	FF703	145°	205	91.7	145	172	205	290	355	459	649	17.9						
	FF750	145°	239	107	169	200	239	338	414	535	757	19.1						

Flow Rate (l/min) = $K\sqrt{bar}$

Ask our technical sales engineers about additional products and services to optimise your spraying process.

Spray Calibration Solutions

Easy-to-use, fast measurement solutions to ensure accurate nozzle installation and maintenance, reduce water wastage and identify nozzle wear.



Spray Pattern & Droplet Distribution



Nozzle Flow Calibrators



Nozzle Cleaning Kit

Complete Spray Bars

Tailored nozzle selections and spray bar designs that integrate seamlessly with your new or existing setup.

- **Expert nozzle selection and placement**
- **Efficient spray coverage**
- **Fast turnaround time**
- **Reduced design burden**
- **High-quality spray bars**



Complete Custom Spraying Systems

Complete spraying systems built around your goals and application.

- **Tailored upstream components supplied individually or as part of complete system**
- **Custom pipework, pumps, tanks, sensors, valves, heating, control panels and more**
- **Seamless integration with existing processes**
- **Built to budget and ROI targets**
- **End-to-end support: design, install, maintain**

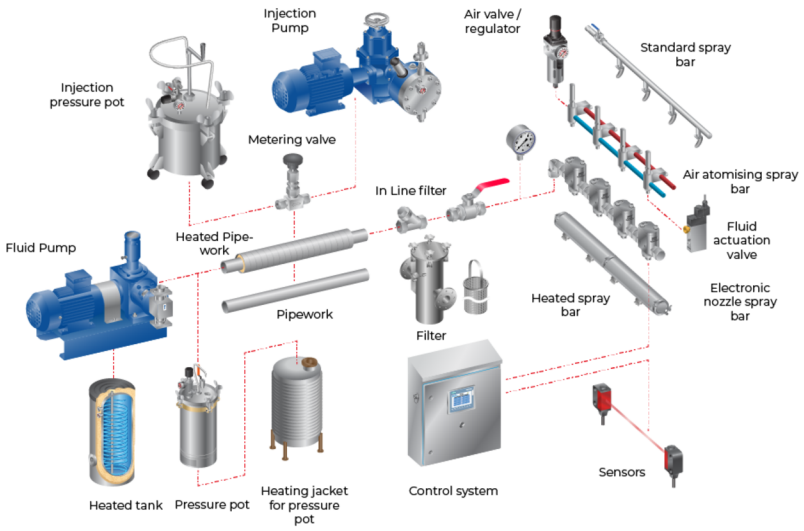

THE GO-TO PEOPLE FOR SUCCESSFUL SPRAY ENGINEERING